MTS *Driver guidance system*

The MTS is an extremely elegant and versatile driver aid/ guidance system that is also suited for use in climatic test benches.

Thanks to the compact design featuring a central pillar to the ceiling, the MTS has an extremely slim and elegant appearance and requires only one mounting point, making attachment to the test bench much easier than with conventional rail systems. All lines are well protected, running inside and concealed from view. Despite its slim appearance, the MTS is stable enough to easily withstand even high winds. All main axes of movement are unlocked simultaneously, allowing the system to be positioned effortlessly with just one hand.

The monitor is mounted in a durable, heatable case featuring handles for positioning as well as operator controls and signal transfer interface, all of which are arranged ideally to facilitate work. Thanks to tremendous ease of operation and its elegant appearance, the MTS driver aid/guidance system will contribute appreciably to enhancing the working climate at your test benches.

Advantages

Central mounting point

Extensive range

Elegant design

Able to be used at even -30 °C

One-hand operation

Maintenance-free

Options

Heated version (as low as -30 °C)

2 CAT5 ports

8 BNC ports

1 PG for cable outlet

1 two-pin grounded socket

1 12 V socket

1 mushroom-style emergency stop switch

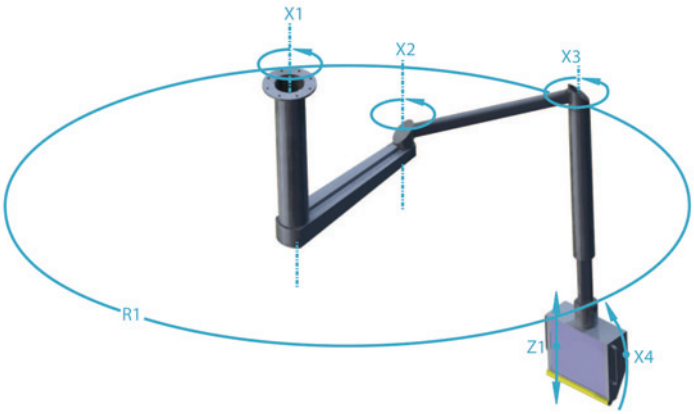

Technical data

Movement radius:	2 meters
Minimum ceiling height:	3.2 meters
Monitor:	22"TFT
Compressed air supply:	6-8 bar, dry and oil-free
Power supply connection:	two-pin grounded
Power supply:	230 V/2.3 kW
Monitor signal:	CAT5 max. 100 m with signal amplifier to VGA

IAG - Industrie Automatisierungsgesellschaft m.b.H · Industriestrasse 2 · 2722 Weikersdorf · Tel.: +43 2622 21734/77 · Fax: +43 2622 21734/85 · Email: r.pokorny@iag.at